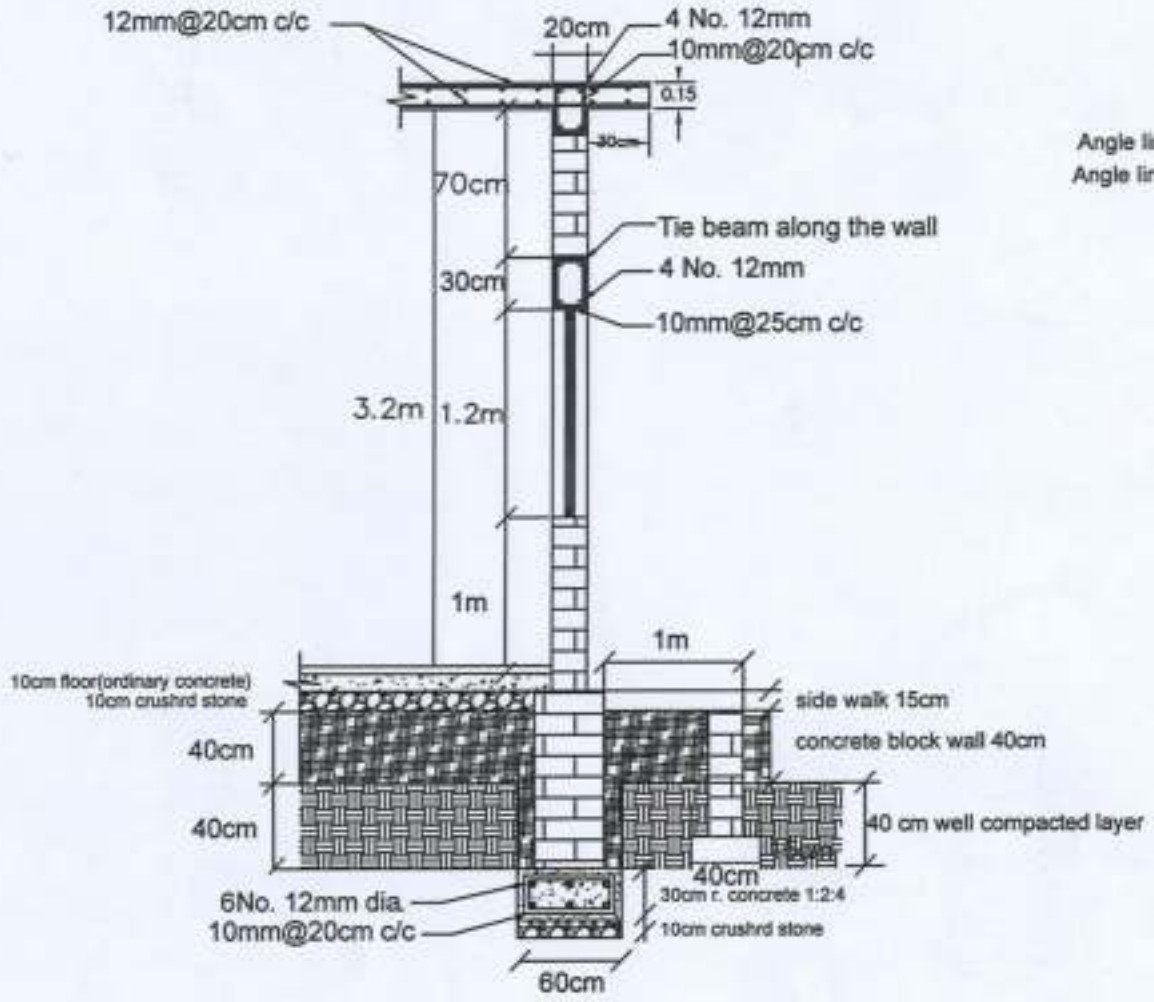

Section B-B

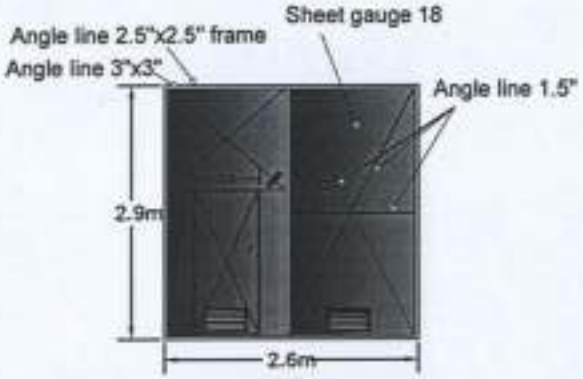

D1

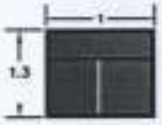

W

D2

Project name: Well and pump room		
Scale	Not to scale	Section and Details